DRW. NO.	Sheet. No.
A105361-001	1/2

記号x数	変 更 内 容 REVISION DESCRIPTION	承認	検図	担当	年月日	変更通知書No.
△B x 10	Change Shape, Add Dimension, Add Note	M. Igarashi	T. Kimoto	T. Murakami	07/03/02	M112426
△C x 2	Part change	T. Ito	S. Yoshida	M. Noguchi	12/10/18	M125393
△D x						
△E x						
△F x						

MCH-1

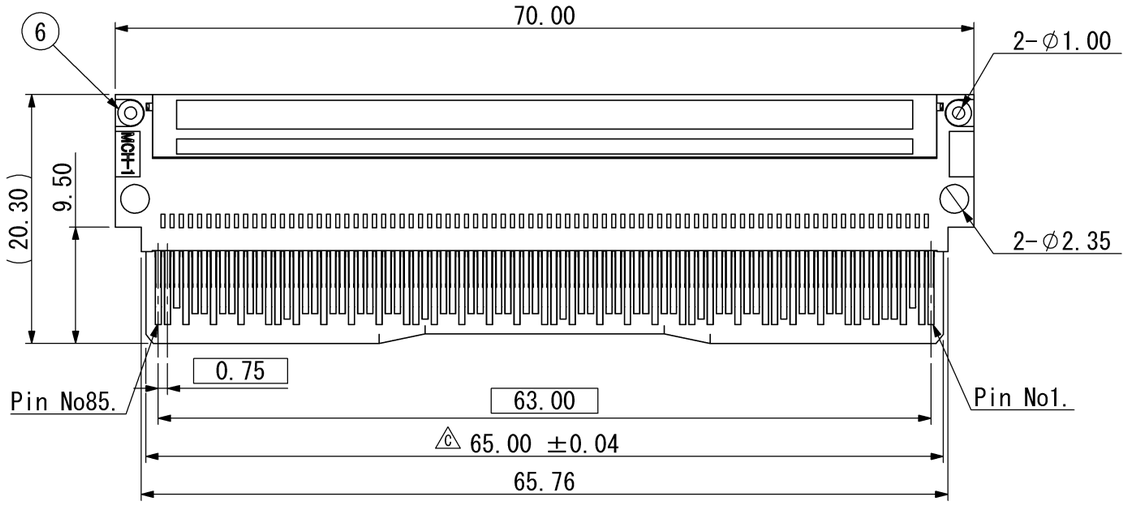

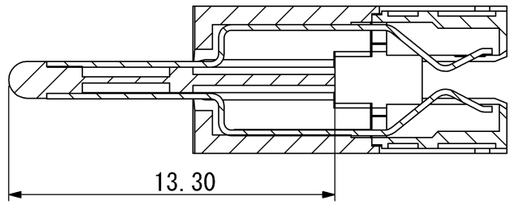

SEC. A-A S=4/1

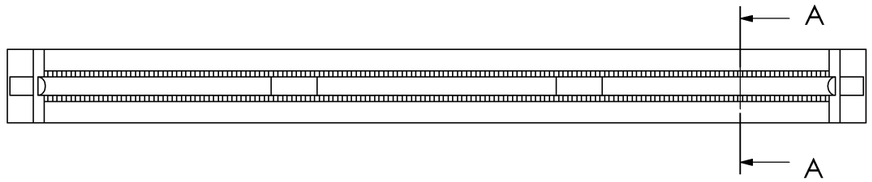

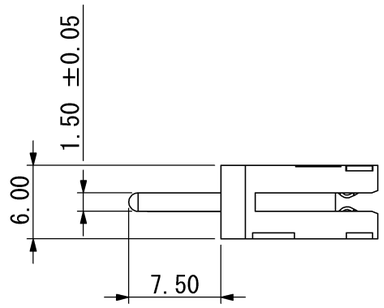

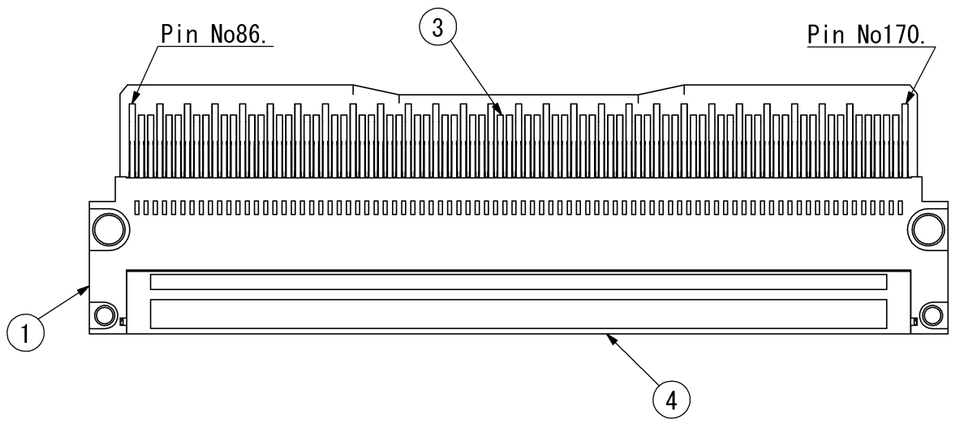

指定外公差 ±0.3
Tolerances ±0.3 unless otherwise specified.
( )寸法は参考値 ( )Reference value.

尺度 SCALE	2 / 1	承認 APP.	承認 APP.	検図 CHK.	製図 DRW.	設計 DSGN.
単位 DIMENSION	mm	06/06/27	06/06/27	06/06/27	06/06/27	06/06/27
三角図法 3RD. ANGLE PROJECTION		M. Ooya	M. Igarashi	T. Kimoto	T. Murakami	T. Ito

山一電機株式会社
YAMAICHI ELECTRONICS Co.,Ltd.

分類(CLASS): MCH Plug Connector

名称(TITLE): CN084-170-1000-1000-0

図番(DRW. NO.): A105361-001 | Sheet No. 1/2 | REV. C

A3-A1-SW004

DRW. NO. A105361-001 | Sheet. No. 2/

Assembly Condition

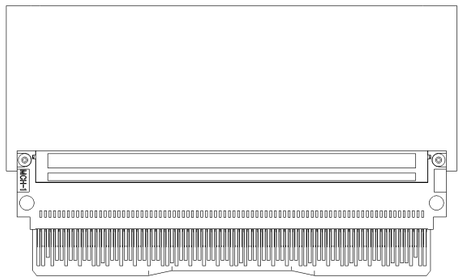

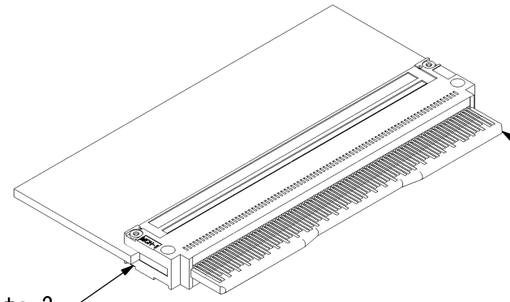

MCH-1
CN084A-170-1000-1000-1 Note.2

Shaft A-2
CN084A-08ME-2 Note.3

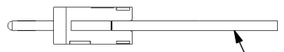

MCH-1a PCB t=1.60
Note.4

部品番号 ITEM	部 品 名 DESCRIPTION	個数 QNT.	材質・寸度 MATERIAL	記事 CONTENT
6	Plug Bush A (MCH-1)	2	SUS	---
5	Plug Shaft A-2	2	SUS	(Attached Note.3)
4	Locator (MCH-1)	2	LCP(UL94V-0)	Black
3	Contact (MCH-1 SIG)	112	BeCu t=0.23	Ni-Au
2	Contact (MCH-1 GND)	58	BeCu t=0.23	Ni-Au
C 1	Housing (MCH-1 Single Type)	1	LCP(UL94V-0)	Black

Plug Shaft A-2 : CN084A-08ME-2
Dimension (Bundled) S=4/1

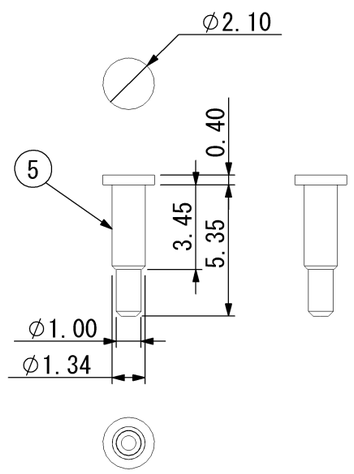

Note
1. Plating specification on the PCB pads
   MCH PCB : Au 0.30μm MIN. over Ni 1.27μmMIN.

2. Parts number for the MCH-1
   CN084A-170-1000-1000-1 (A106147-001)

3. Parts number for the Plug Shaft A-2
   CN084A-08ME-2 (A105377-001)

4. Refer to Single module PCB(CN084B-170-01PB, A106528-001)
   and Double module PCB(CN084B-170-02PB, A106301-001)
   for the recommended module board dimensions.
   Also, please contact Yamaichi separately when the module board dimensions are different from CN084B-170-01PB and CN084B-170-02PB.

指定外公差 ±0.3
Tolerances ±0.3 unless otherwise specified.
( )寸法は参考値 ( )Reference value.

尺度 SCALE	1 / 1	承認 APP.	承認 APP.	検図 CHK.	製図 DRW.	設計 DSGN.
単位 DIMENSION	mm	06/06/27	06/06/27	06/06/27	06/06/27	06/06/27
三角図法 3RD. ANGLE PROJECTION		M. Ooya	M. Igarashi	T. Kimoto	T. Murakami	T. Ito

山一電機株式会社
YAMAICHI ELECTRONICS Co.,Ltd.

分類(CLASS): MCH Plug Connector
名称(TITLE): CN084-170-1000-1000-0
図番(DRW. NO.): A105361-001 | Sheet No. 2/ | REV. C

A3-A2-SW004